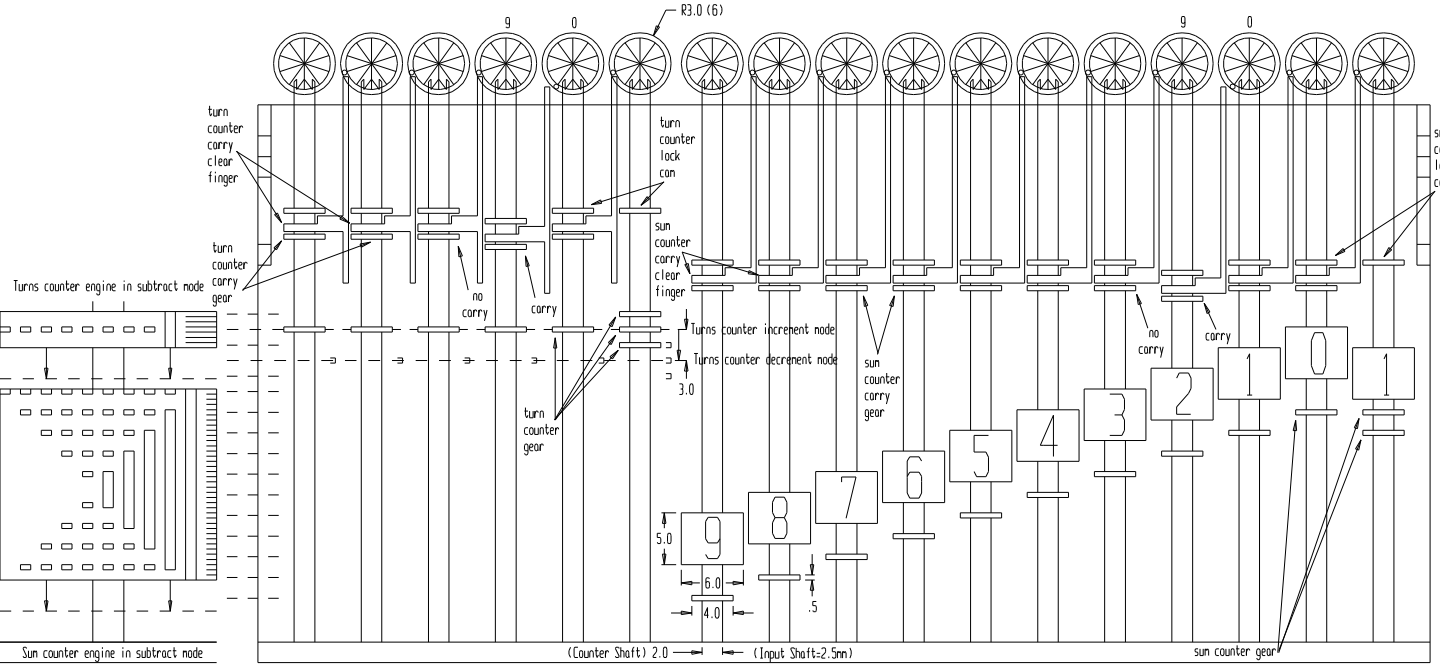

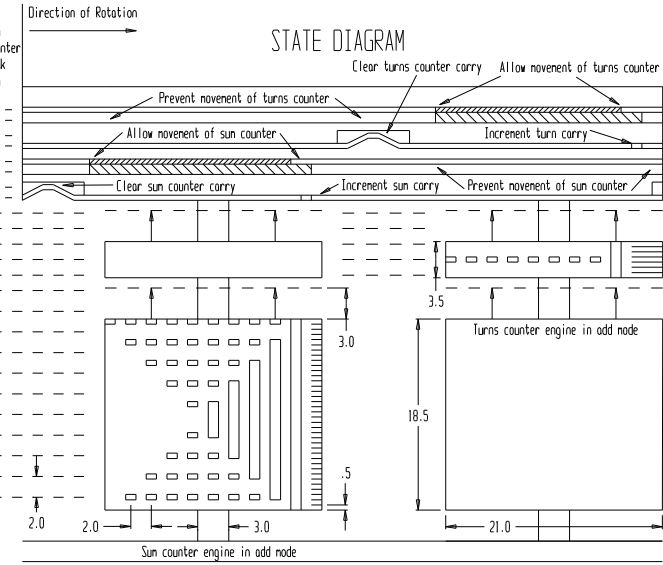

THE CURTA MECHANISM
and STATE DIAGRAM

by Rick Furr

Version 6.2.0
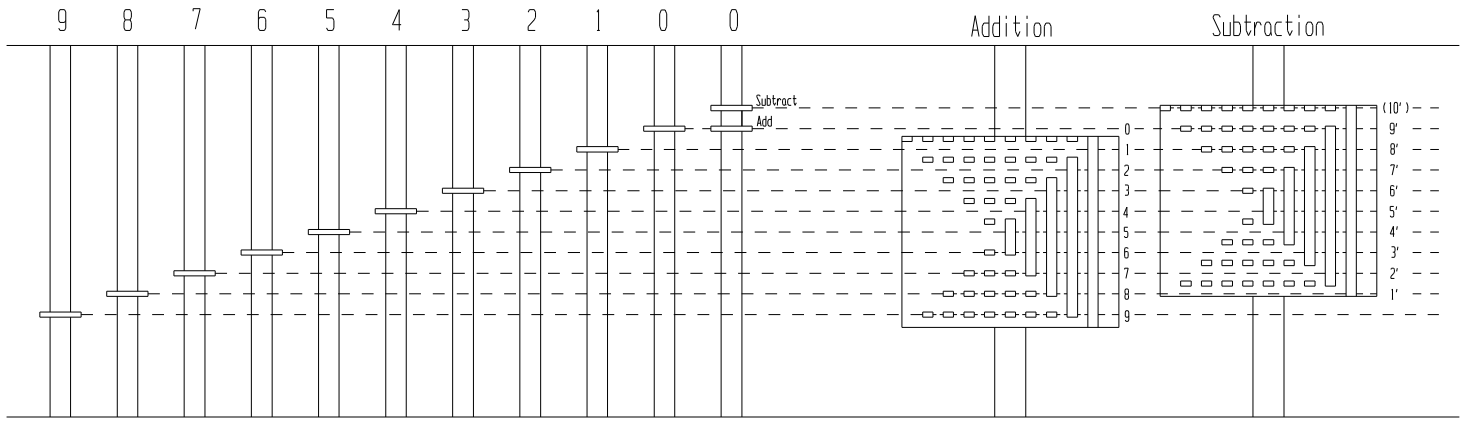
January 26, 2003